14+ AGES

HIGH SPEED VEHICLE

(Introduction manual)

(Please read these instructions carefully before using it)

mini SPYDER RTR MT



EP

1/18 scale offroad

Serpent

- Please fully charge the battery pack before each use.
- This product is not a toy, but a full-scale model car. Children under aged 14 must not operate this product unless they are closely supervised by adults.

RTR READY TO RUN | SHOCK | STEERING SERVO | F.U.L.L. FUNCTION | 14+ AGES

FUNCTION:

FORWARD, BACKWARD,
TURN LEFT OR RIGHT,LIGHT, DRIFT.

⚠ Warning:

Choking hazard! This product contains small parts. NOT suitable for children under 14 years. Contains electrical components and should be kept dry at all times. Regularly check the battery charger wires, plugs and shell and other components for damage. DO NOT use if any part is damaged.

Battery Safety	1. Detachable small parts should be stored safely and out of reach of children. 2. If interference is experienced, turn the model off and try it again in a different area. 3. Remote control will not function correctly if the batteries are low. Please replace the batteries. 4. Please discard old/used batteries in a safe manner. Consider your environment! 5. Please store the remote control in cool, dry place. 6. DO NOT expose to fire or high temperatures, moist storage. 7. Should the battery get wet, wipe immediately with a soft dry cloth. If deformed, please stop usage.
	Battery Safety 1. The car uses a 7.4V Li-Ion rechargeable battery. 2. Remote control uses 3 x 1.5V AA batteries. 3. Please pay attention to correct polarity when replacing batteries. 4. Rechargeable batteries should be charged under adult supervision. 5. DO NOT use a mix of old and new or different types of battery. 6. When the battery is empty, the battery should be recharged. 7. DO NOT short circuit any terminals. 8. DO NOT attempt to recharge non-rechargeable batteries. 9. Remove batteries from the model car when recharging. 10. DO NOT put batteries into a fire or into water. 11. The rated input voltage battery charger MUST be suitable for your mains power voltage. 12. During charging it is quite normal for the charger and batteries to heat up. 13. It is forbidden to use non original batteries for this model car.

Installation of the transmitter battery

1 **As shown in the figure, unscrew the screw counterclockwise and remove the battery lid.**

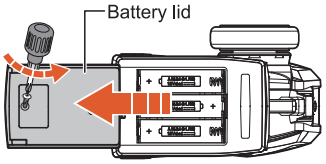

2 **Load 3 AA-size alkaline batteries as shown in the illustration. Caution: install batteries with correct polarity.**

3x"AA"Size Batteries for transmitter(Not Included)

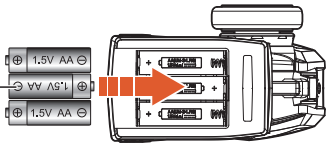

3 **As shown in the figure, close the battery lid and tighten the screw clockwise.**

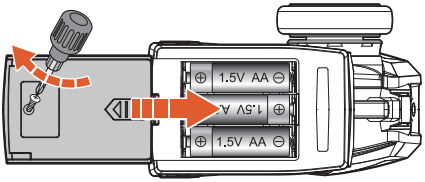

- Use the batteries of same brand.
- Do not mix old and new batteries in use.
- Remove the batteries from the transmitter when not in use. Do not use leaky batteries.

Transmitter function introduction

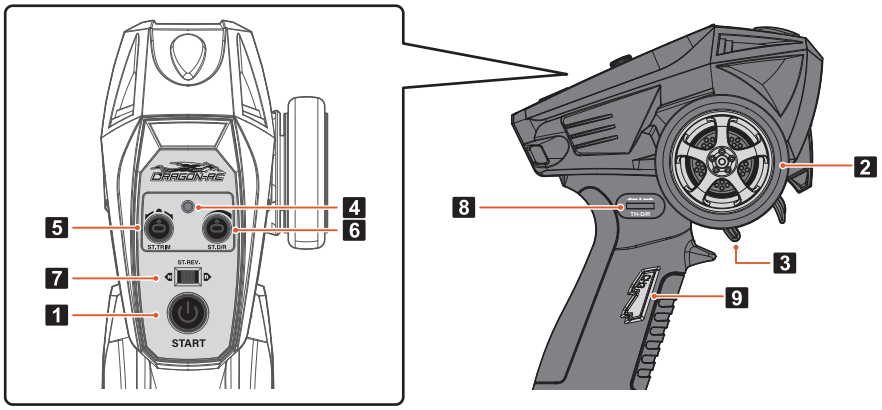

1. Power Switch(On/Off):Press it to switch on or off power.
2. Steering Wheel: Turn the wheel to the left, the car will turn left; Turn the wheel to the right, the car will turn right.
3. Throttle Trigger: Pull the trigger backward, the car will accelerate forward; Pull it forward, the car will move backword.
4. Power LED: It flashes rapidly during connection. After connection, it stops flashing and keep lights on. Please replace batteries in case the light flash slowly which indicates the power is not enough.
5. Steering Trim: It is used to make the vehicle drive in straight line.Turning the steering trim knob to adjust.
6. Steering Dual Rate： Limits the maximum travel of the steering servo in both directions.
7. Steering Reverse Switch:Reverse direction switching for left and right steering.
8. Speed adjustment switch: Slide right to increase speed; slide left to decrease speed. beginners should start at slow speed.
9. Lamp control button: Each time the "CH3" button is pressed, it switch to a different lighting mode.

To drive the vehicle

1 Switch on the transmitter, and then the vehicle.

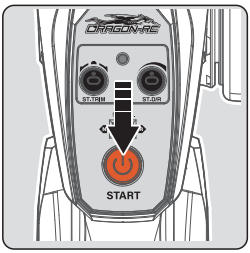

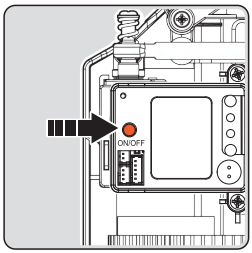

Press the "START" button to turn the transmitter ON. Press and hold the button on the ESC/Receiver for 2-3 seconds to switch on the ESC/Receiver. The transmitter light remains lit, which means the connection is sucessful.

2 Check Throttle Operation

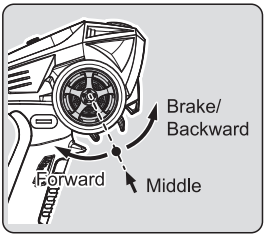

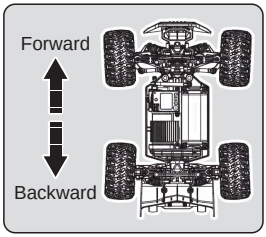

When you pull the throttle trigger, your car accelerates forward. When you push the throttle trigger,your car brakes. When you push the trigger again the car will reverse, and when you release the trigger it will be idle.

3 Adjust Steering Trim to Center Front Wheels

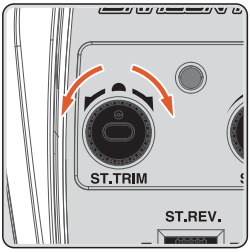

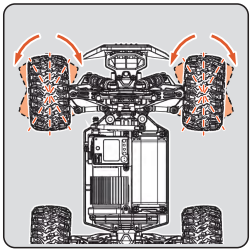

If the front wheels are unaligned and off center line when you do not move the steering wheel on the transmitter, please turn the steering trim knob to align the front wheels inline.
Turn the steering trim clockwise to align them if the front wheels point to the left. Turn the steering trim anti-clockwise to align them if the front wheels point to the right.

4 Steering Dual Rate

Turn the ST.D/R knob down to reduce maximum steering angle.

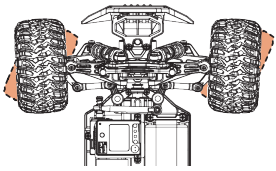

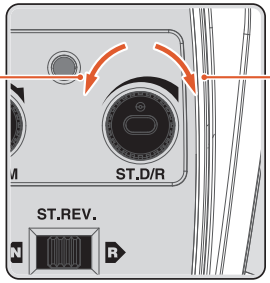

Turn the ST.D/R knob up to increase maximum steering angle.

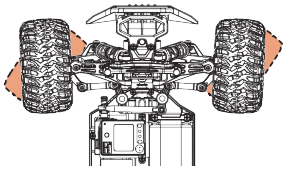

Steering Dual Rate: is the transmitter setting that limits the maximum travel (throw) of your steering servo in both directions.

5 Adjust Steering Reverse to Correct Steering Direction

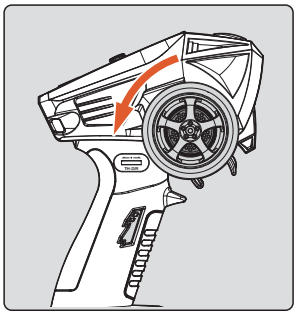

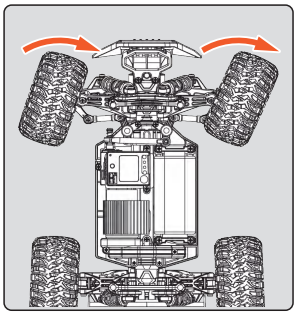

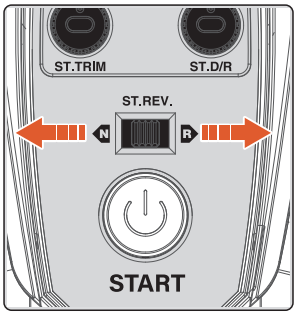

If you steer to the right and the car turn left switch the steering reverese switch to make the car turn right.

6 Throttle Speed Adjustment (TH-D/R)

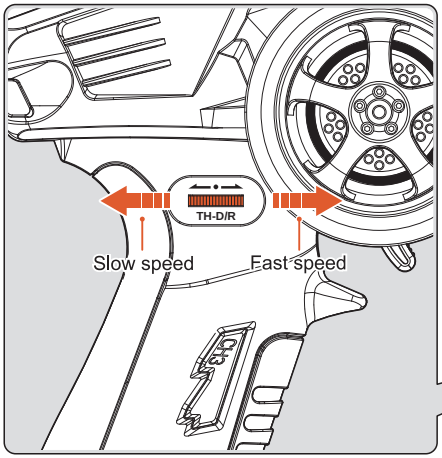

Throttle Speed Adjustment Slider: Slide the TH-D/R slider left or right to adjust the vehicle's maximum speed. Sliding right raises top speed; sliding left limits top speed. Beginners should start with low speed to get familiar with vehicle control.

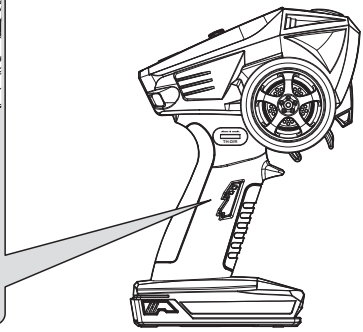

To stop driving the vehicle

1 Power off the vehicle first, then the transmitter.

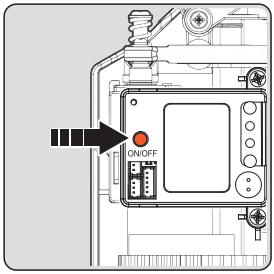

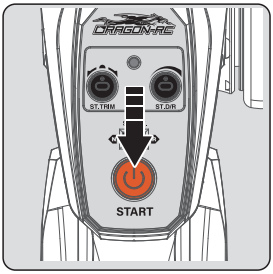

Press and hold the ESC/Receiver button for 2-3 seconds to power off the vehicle. Press the transmitter's "START" button to shut down the transmitter.

2 Post-use Inspection & Maintenance

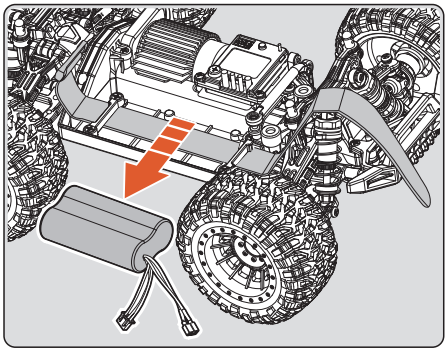

1.Wipe the vehicle with a soft cloth and brush, then store it in a dry, cool, clean area out of children's reach.
2.Disconnect and remove the battery pack when the vehicle is not in use.

Note: Fully charge the battery prior to each use. When the vehicle's speed drops noticeably, charge the battery immediately to prevent damage caused by over-discharge. For long-term storage, top up the battery every 1~2 weeks.

Maintenance guide

1. If it is not used for a long time, please take out the battery in the model car and remote control.
2. Make sure the battery is fully charged before each use.
3. Before or after each use, carefully check whether the circuit wiring of the model car is fastened and here is no dropped connector. Carefully check if the wheels are fastened. Loose wheels will cause excessive wear of transmission shaft, wheel or wheel hexacon.
4. Check the transmission gears if they need to be lubricated.
5. The idle battery needs to be stored in a dry and cool place after charging (up to 50-60% of the power) to avoid children's touch.
6. After each use, please carefully check if all parts of the model car are working and if not repair or replace them in time. Use a fine brush to clean the sand, dirt and ether dirt in the model car, and then use a soft cloth to wipe it clean.

Charging the battery pack

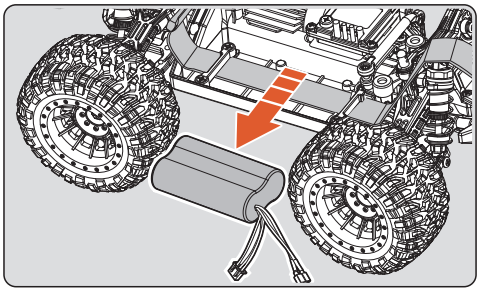

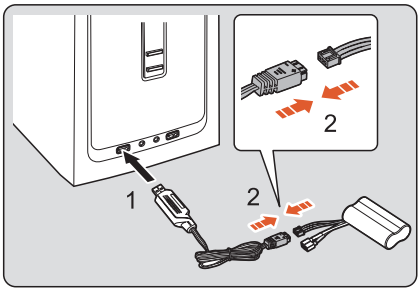

1. If it is not used for a long time, please take out the battery in the model car and remote control.
2. Make sure the battery is fully charged before each use.
3. Before or after each use, carefully check whether the circuit wiring of the model car is fastened and here is no dropped connector. Carefully check if the wheels are fastened. Loose wheels will cause excessive wear of transmission shaft, wheel or wheel hexacon.
4. Check the transmission gears if they need to be lubricated.
5. The idle battery needs to be stored in a dry and cool place after charging (up to 50-60% of the power) to avoid children's touch.
6. After each use, please carefully check if all parts of the model car are working and if not repair or replace them in time. Use a fine brush to clean the sand, dirt and ether dirt in the model car, and then use a soft cloth to wipe it clean.

Reminder

Use a standard 5V/2A mobile phone USB power adapter for charging to reduce total charging duration.

⚠ Warning:

-Do not use non-OEM rechargeable batteries, as they may impair vehicle performance. Never leave charging batteries unattended.
-Children may only perform charging under adult supervision.
Do not use leaking or physically damaged batteries.

Solutions to problems

Problem	Cause	Remedy
Vehicle Fails to Run	Low vehicle battery voltage.	Remove the depleted battery for charging and replace it with a fully charged unit.
	The drive motor is damaged.	Replace the damaged motor promptly.
	Faulty drive motor.	Replace the motor if the gearbox makes abnormal noise or overheats during low-speed operation.
	The ESC / Reciver isn't working.	Please contact the manufacturer whether it can be repaired, or needs to be replaced.
	Damaged wiring.	Please reconnect the damaged wire and insulate it.
	Damaged or loose motor connector.	Inspect motor power wiring for open circuit; re-solder terminals if disconnected.
	Loose power connector contact.	Inspect all connector contacts for looseness; reseat and secure connections as needed.
Vehicle out of control	When the car is low on battery.	Please recharge the car battery, or replace it with a fully-charged battery.
	The ESC/ Receiver isn't working.	Please contact the manufacturer whether it can be repaired, or needs to be replaced.
	The suspension is not moving.	Please check the shocks if they are dirty, and check the pivot pins if they are blocked with dirt.
	The servo saver isn't working.	Please check the spring if there is dirt in and clean everything and lubricate.
	Damaged steering assembly swing arm.	Please contact the manufacturer whether it can be repaired, or needs to be replaced.
	Excessive radio frequency interference from surrounding electronic devices.	Try to operate your model at a different location that avoids Radio signals and other electromagnetic interference.
	Excessive wear on the transmission parts.	Please check carefully the part that fails, and check or is worn. and re-assemble it. If the gear or any other accessory is badly worn, please replace it with a new one. Disassembly and assembly may refer to the proper instructions in the manual.
	Vehicle operated outside rated remote control range.	Keep the vehicle within the specified effective remote operating range.

Assembly view

1 Shock absorber

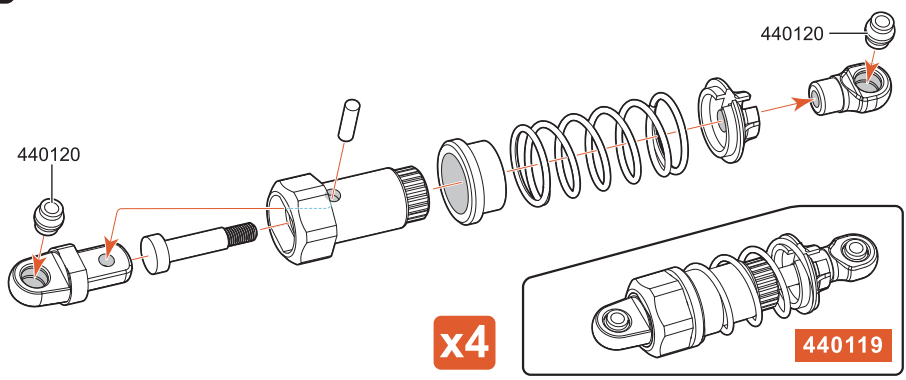

2 Diff. Complete [Fr./Rr.]

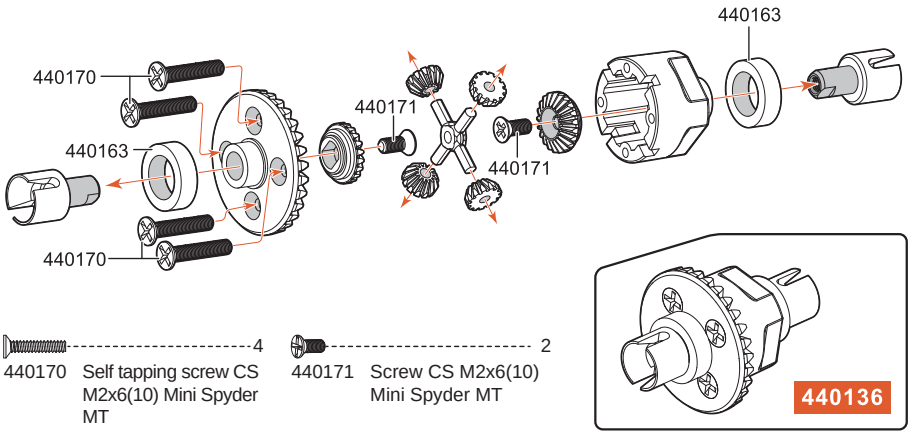

4 440170 Self tapping screw CS M2x6(10) Mini Spyder MT

2 440171 Screw CS M2x6(10) Mini Spyder MT

3 Center drive shaft assembly

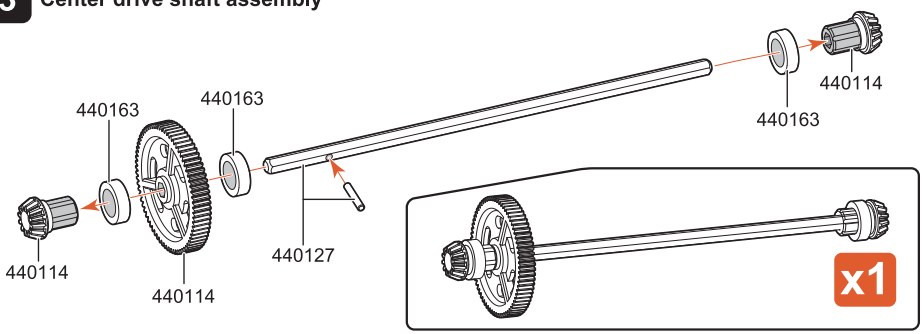

4 Five wire servo saver assembly

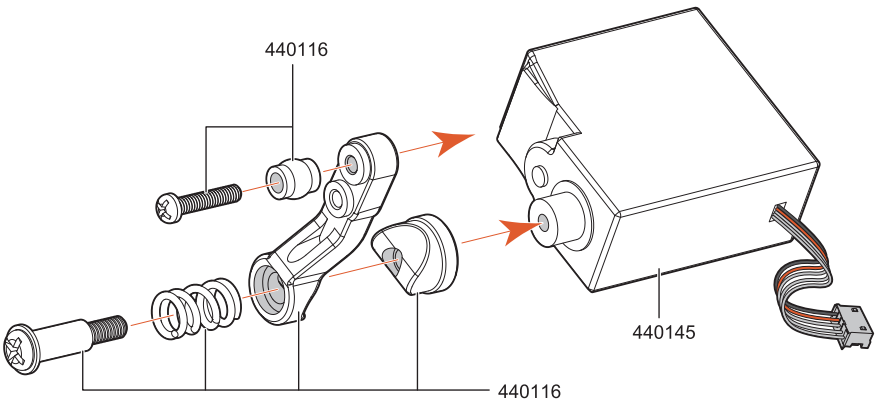

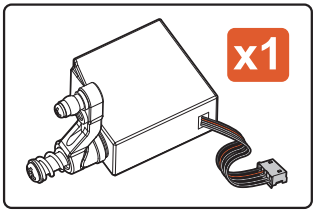

5 Assembly of motor

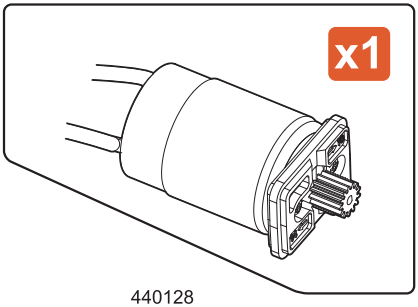

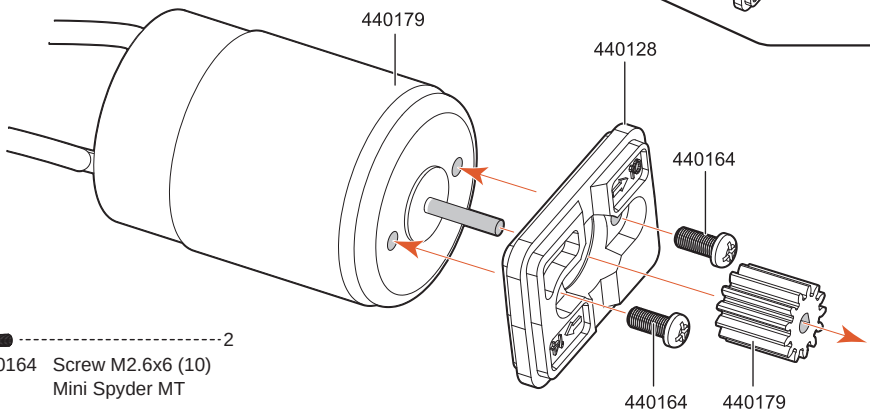

2
440164 Screw M2.6x6 (10)
Mini Spyder MT

6 Assembly of differential and transmission device

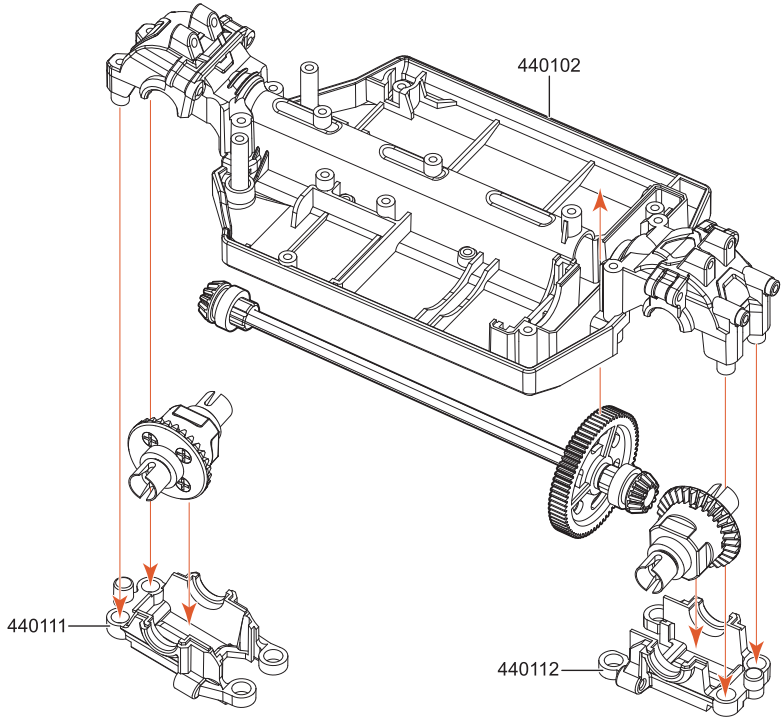

7 Assembly of motor

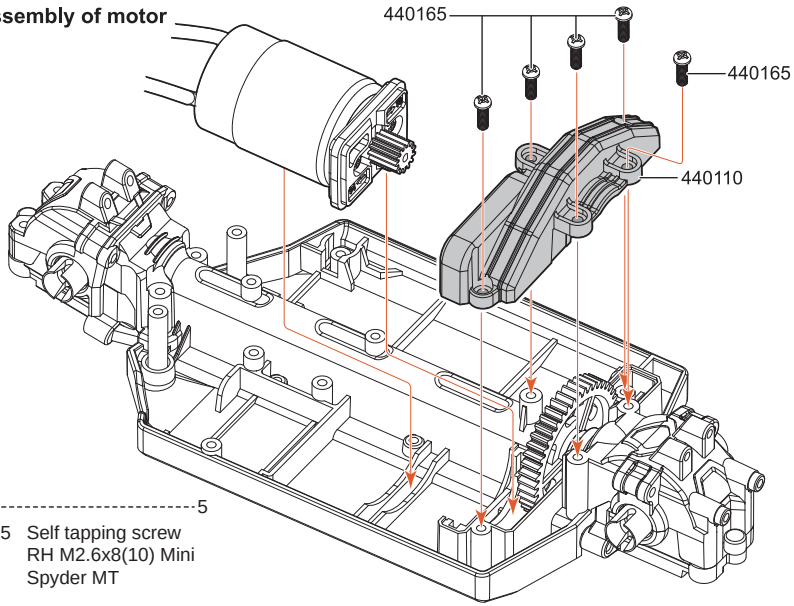

5

440165 Self tapping screw RH M2.6x8(10) Mini Spyder MT

8 Steering assembly

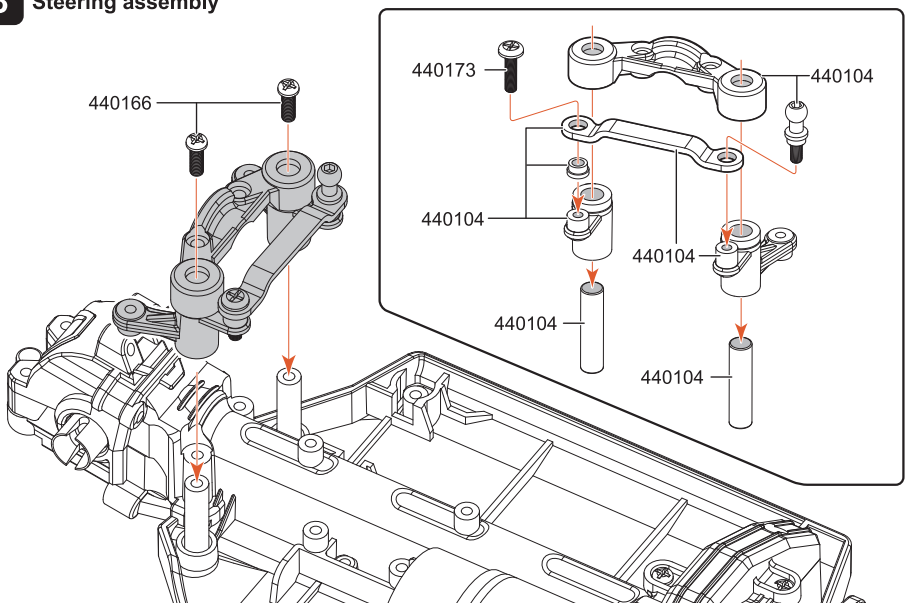

2
440166 Screw RH M2.6x10
(10) Mini Spyder MT

1
440173 Screw PH M2.5x10
(10) Mini Spyder MT

9 Receiver assembly

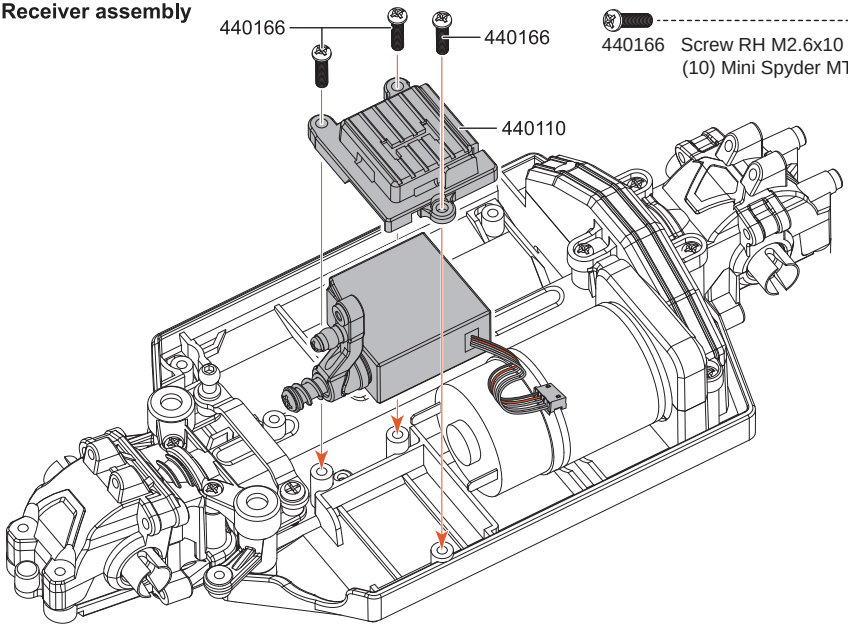

3
440166 Screw RH M2.6x10
(10) Mini Spyder MT

10 Install the servo linkage

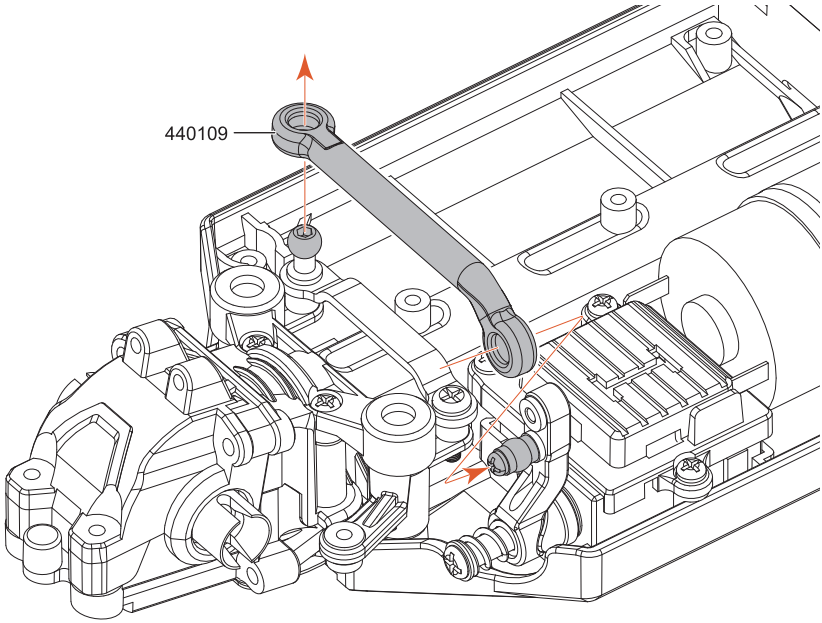

11 Front shock tower installation

2

440165 Self tapping screw RH M2.6x8(10)Mini Spyder MT

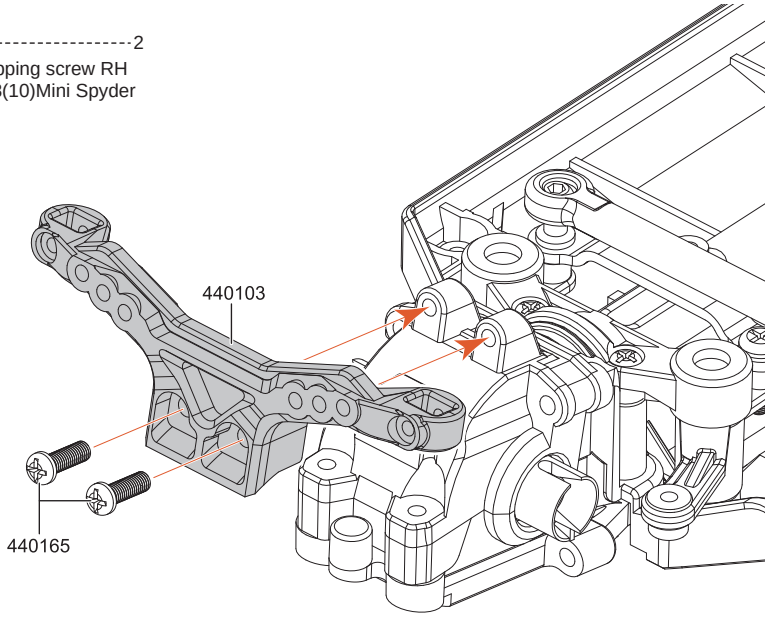

12 Front suspension assembly

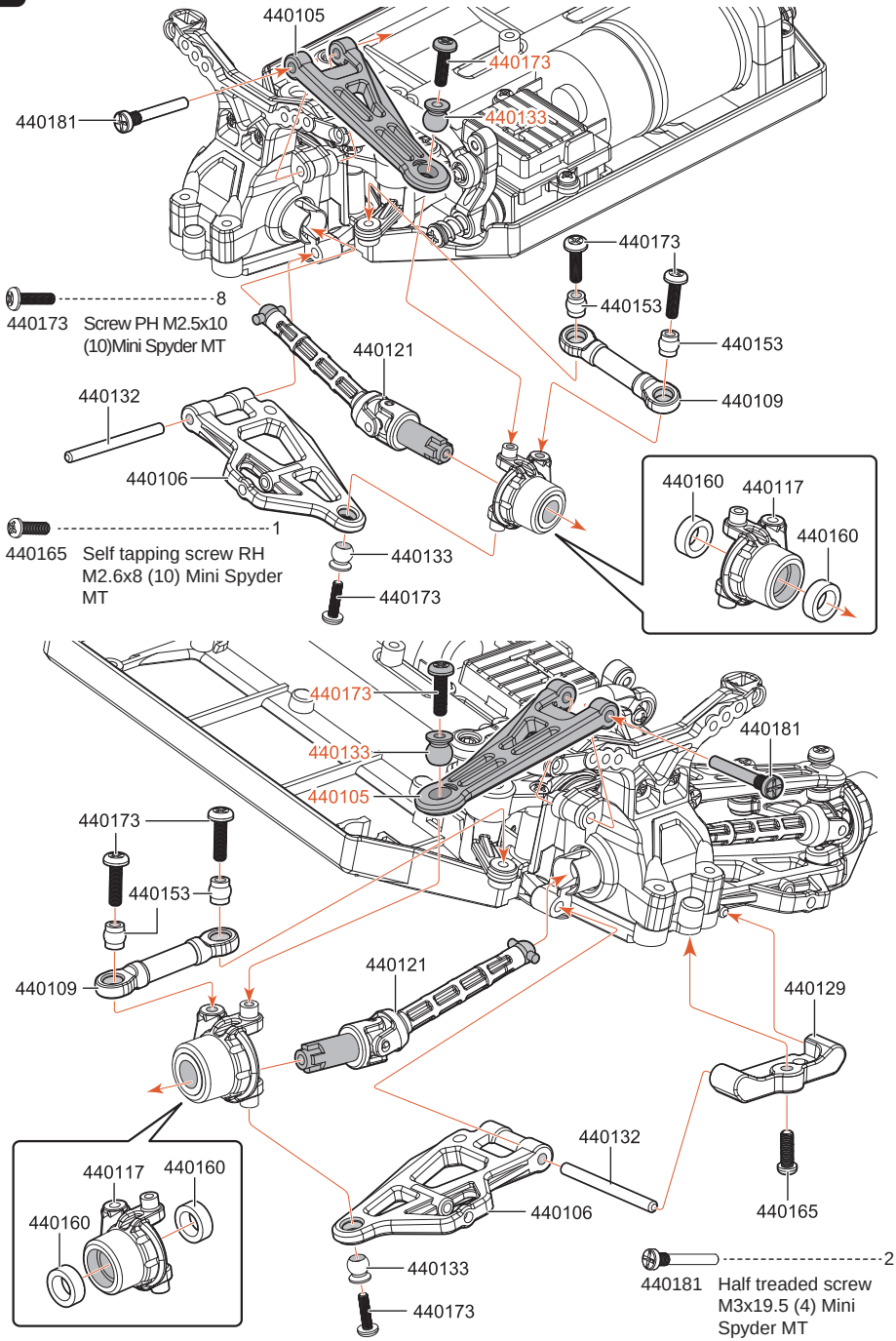

13 Front suspension assembly

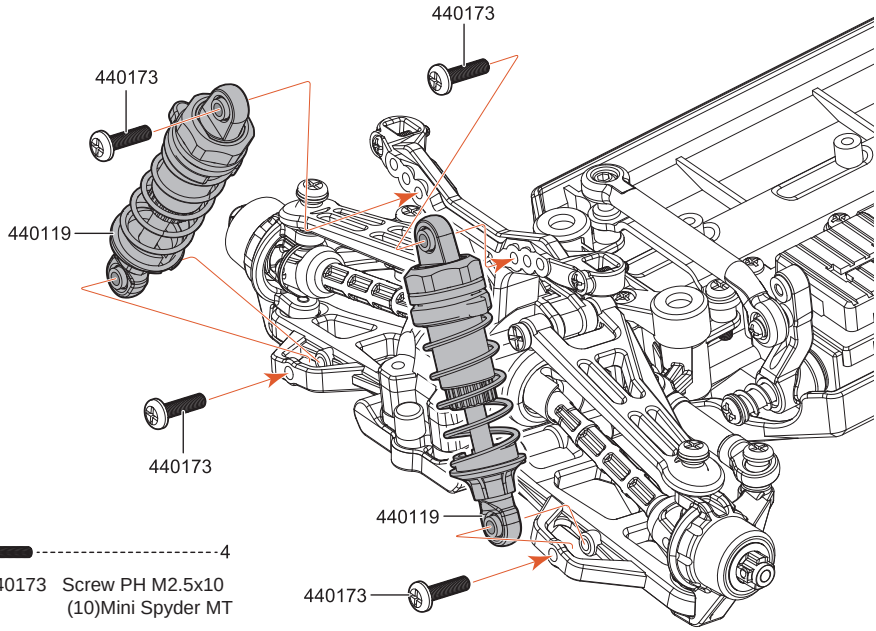

4
440173 Screw PH M2.5x10 (10)Mini Spyder MT

14 Rear shock Tower installation

2
440165 Self tapping screw RH M2.6x8 (10) Mini Spyder MT

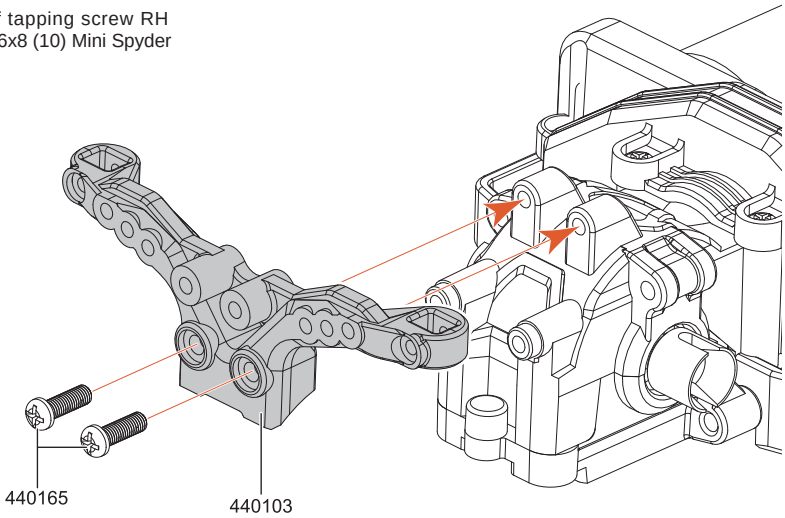

15 Rear suspension assembly

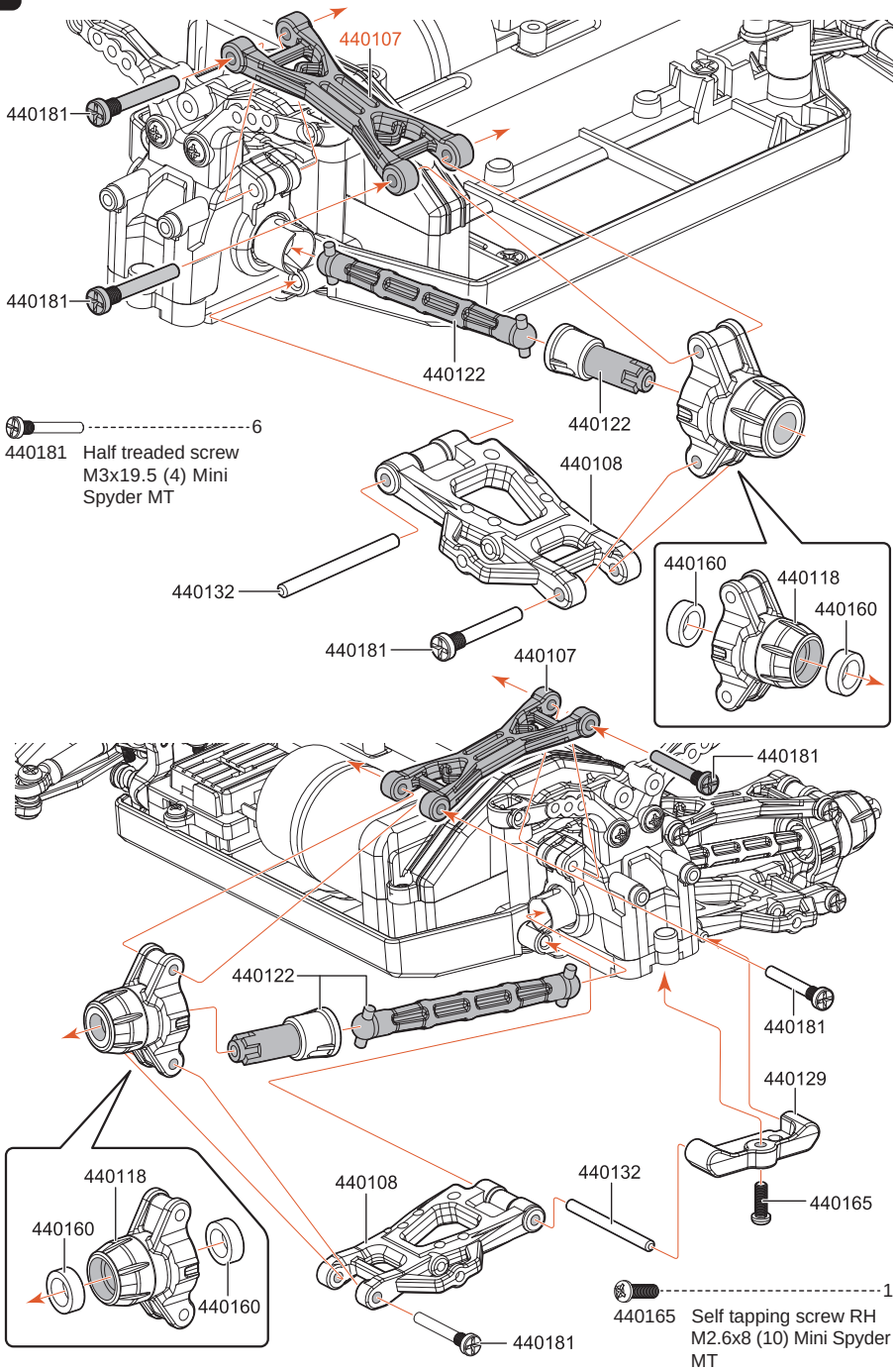

440181 Half treaded screw M3x19.5 (4) Mini Spyder MT ---------- 6

440165 Self tapping screw RH M2.6x8 (10) Mini Spyder MT ---------- 1

16 Rear shock assembly

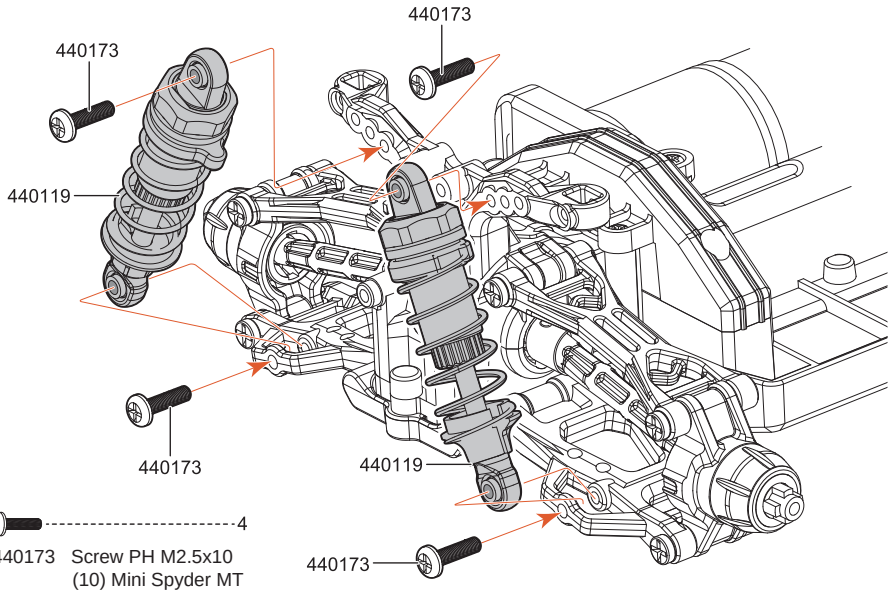

4

440173 Screw PH M2.5x10 (10) Mini Spyder MT

17 Install the rear car shell strut

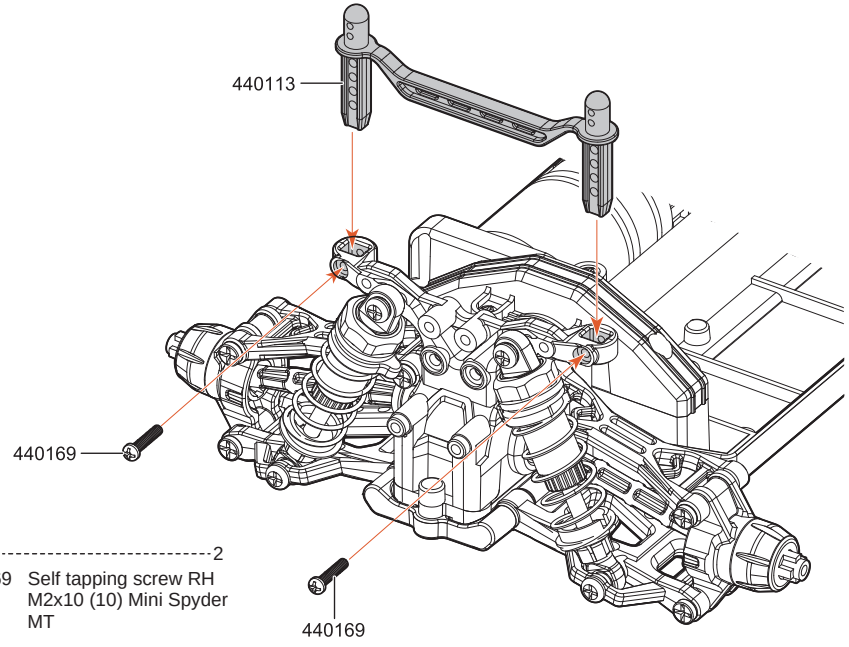

2

440169 Self tapping screw RH M2x10 (10) Mini Spyder MT

18 Brush ESC / Receiver installation

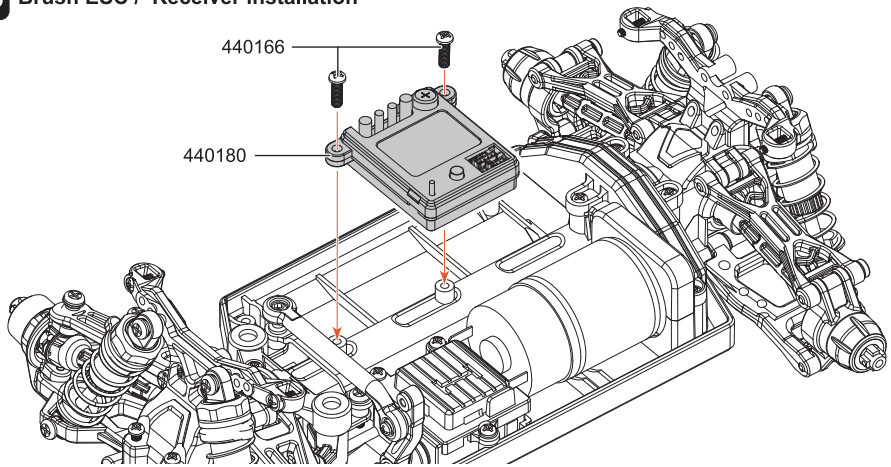

19 Installing the base plate

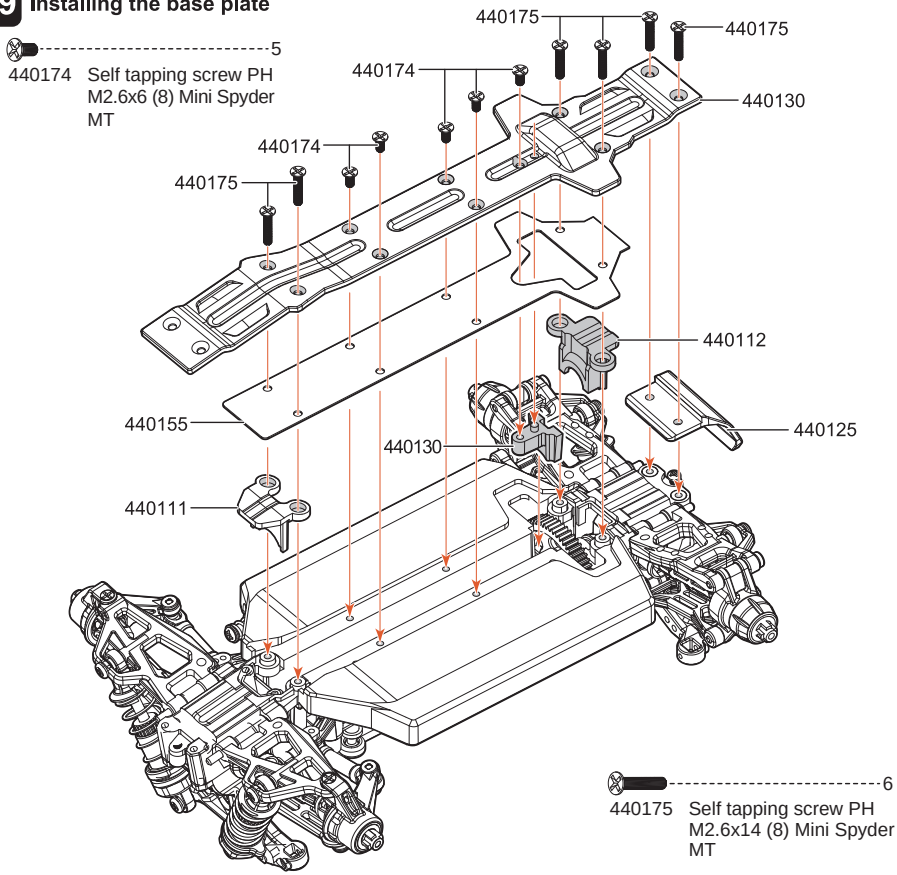

5
440174 Self tapping screw PH M2.6x6 (8) Mini Spyder MT

6
440175 Self tapping screw PH M2.6x14 (8) Mini Spyder MT

20 Front bumper assembly

2
440165 Self tapping screw RH M2.6x8 (10) Mini Spyder MT

2
440175 Self tapping screw PH M2.6x14 (8) Mini Spyder MT

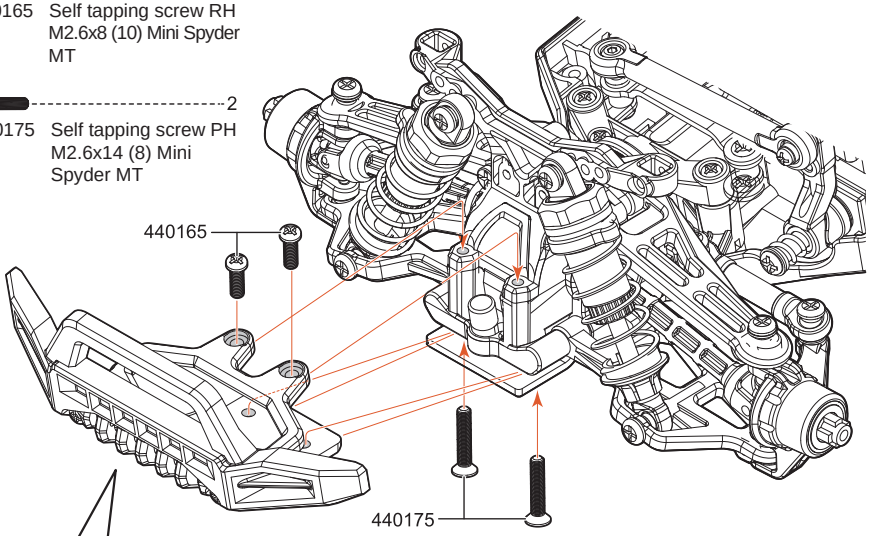

2
440165 Self tapping screw RH M2.6x8 (10) Mini Spyder MT

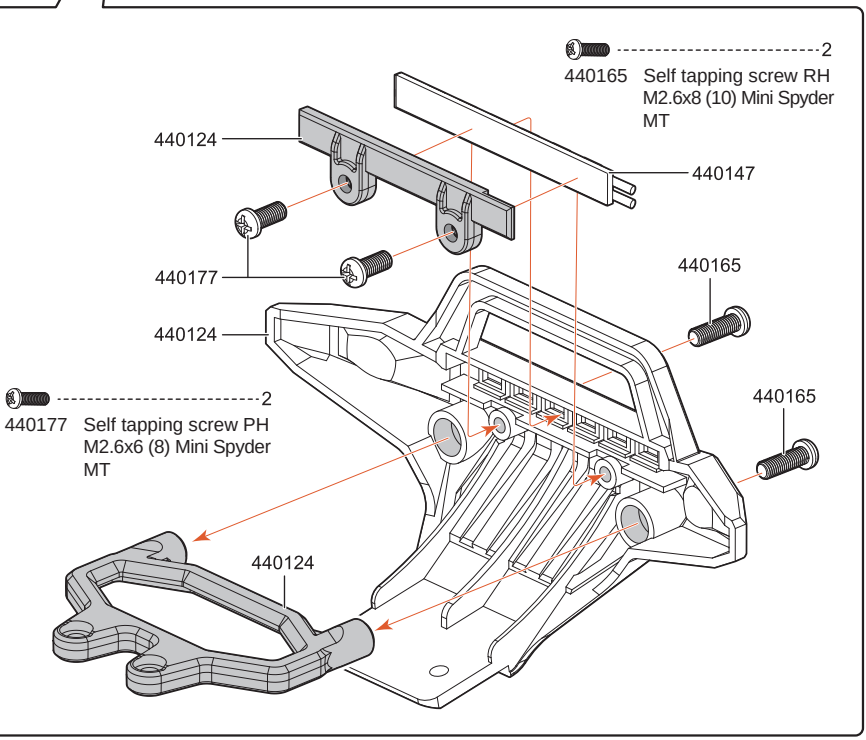

2
440177 Self tapping screw PH M2.6x6 (8) Mini Spyder MT

21 Rear anti-collision assembly

4
440166 Screw RH M2.6x10 (10) Mini Spyder MT

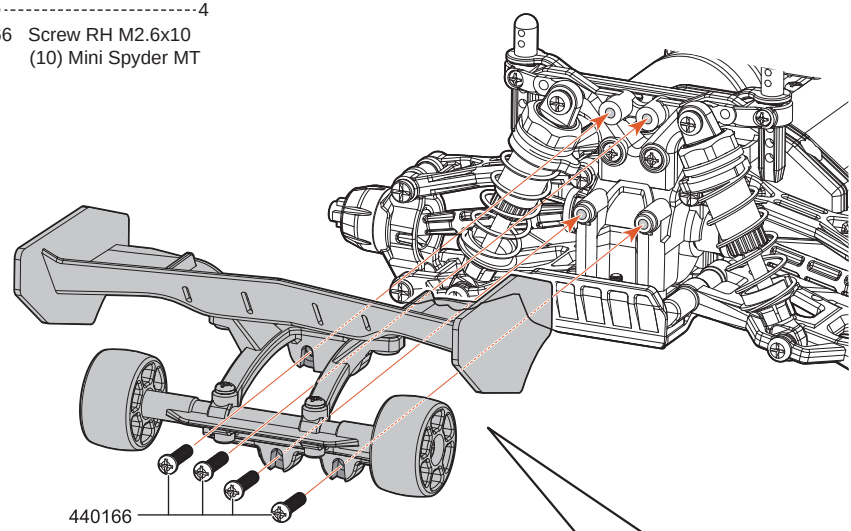

2
440165 Self tapping screw RH M2.6x8 (10) Mini Spyder MT

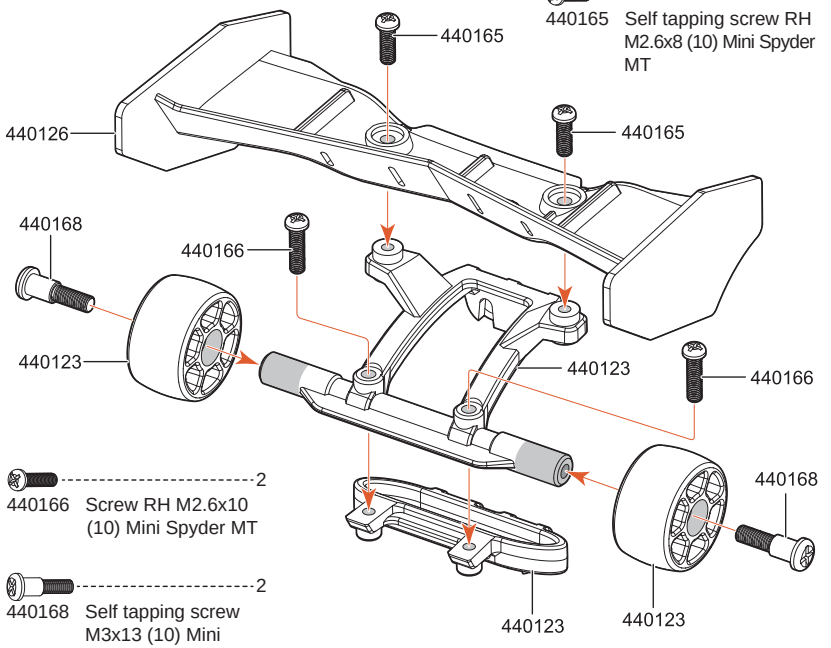

2
440166 Screw RH M2.6x10 (10) Mini Spyder MT

2
440168 Self tapping screw M3x13 (10) Mini Spyder MT

22 Brush wheel installation

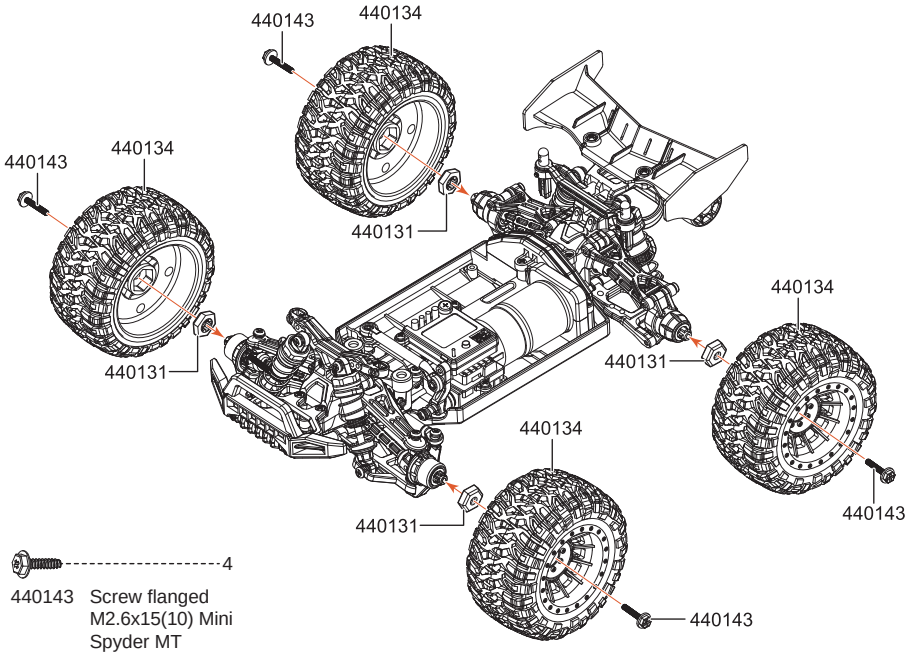

4

440143 Screw flanged M2.6x15(10) Mini Spyder MT

23 Install the front car shell strut

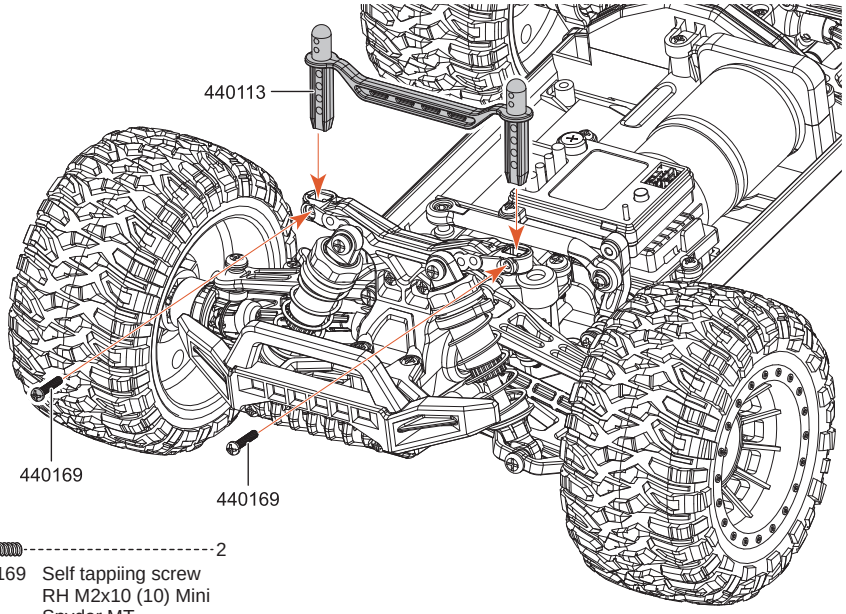

2

440169 Self tappiing screw RH M2x10 (10) Mini Spyder MT

24 Install battery grid

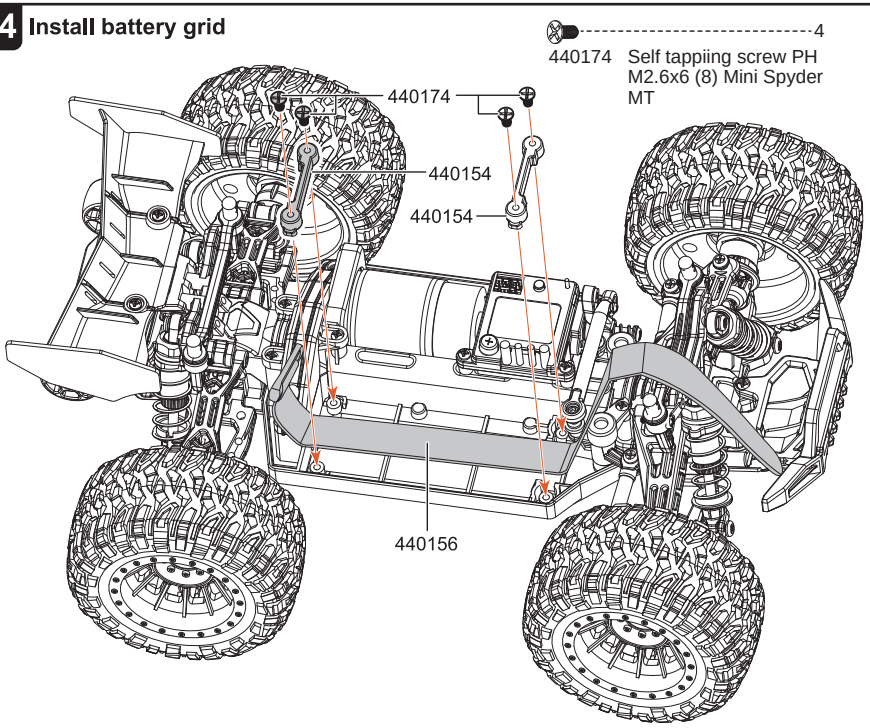

25 Battery pack installation

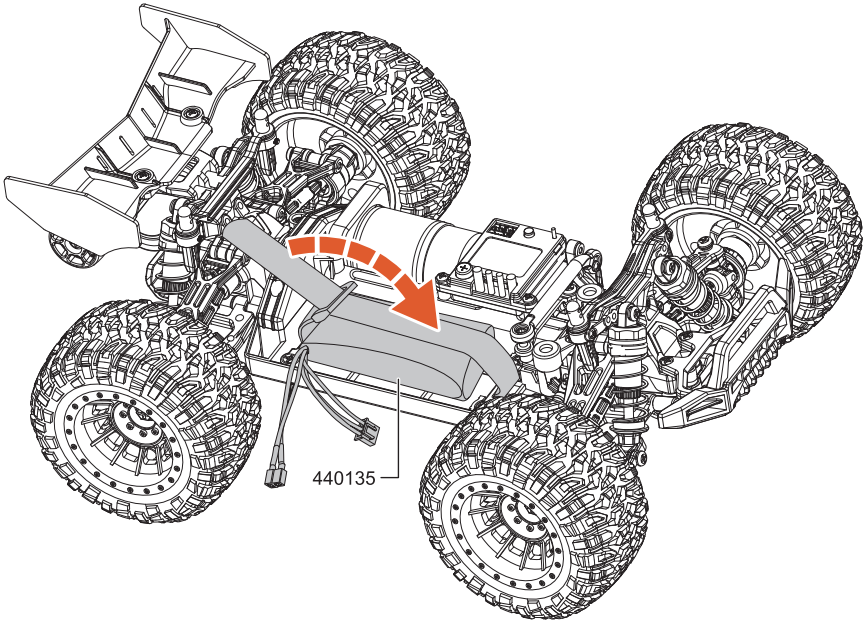

26 Connect wire

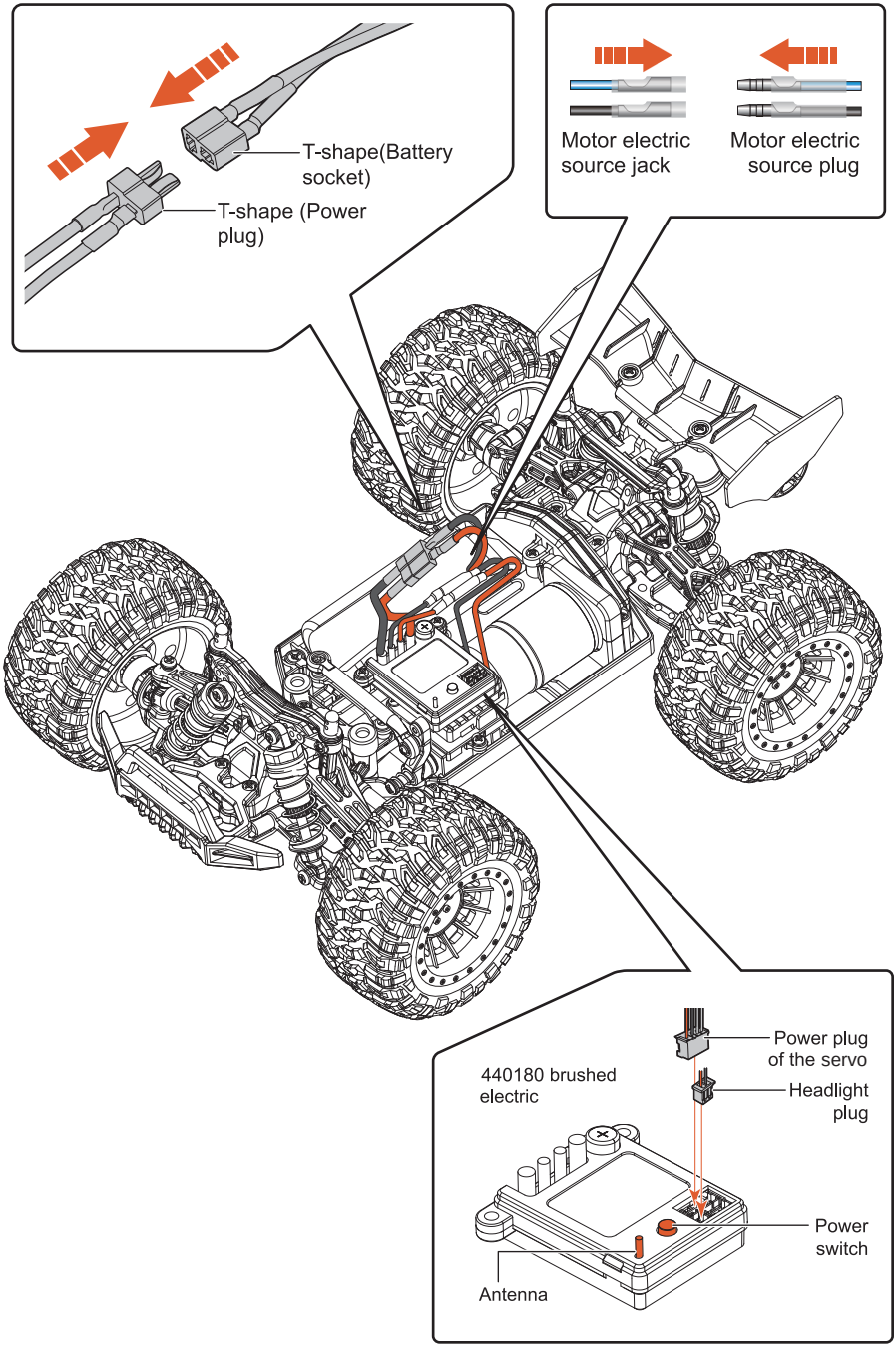

27 Car Body Installation

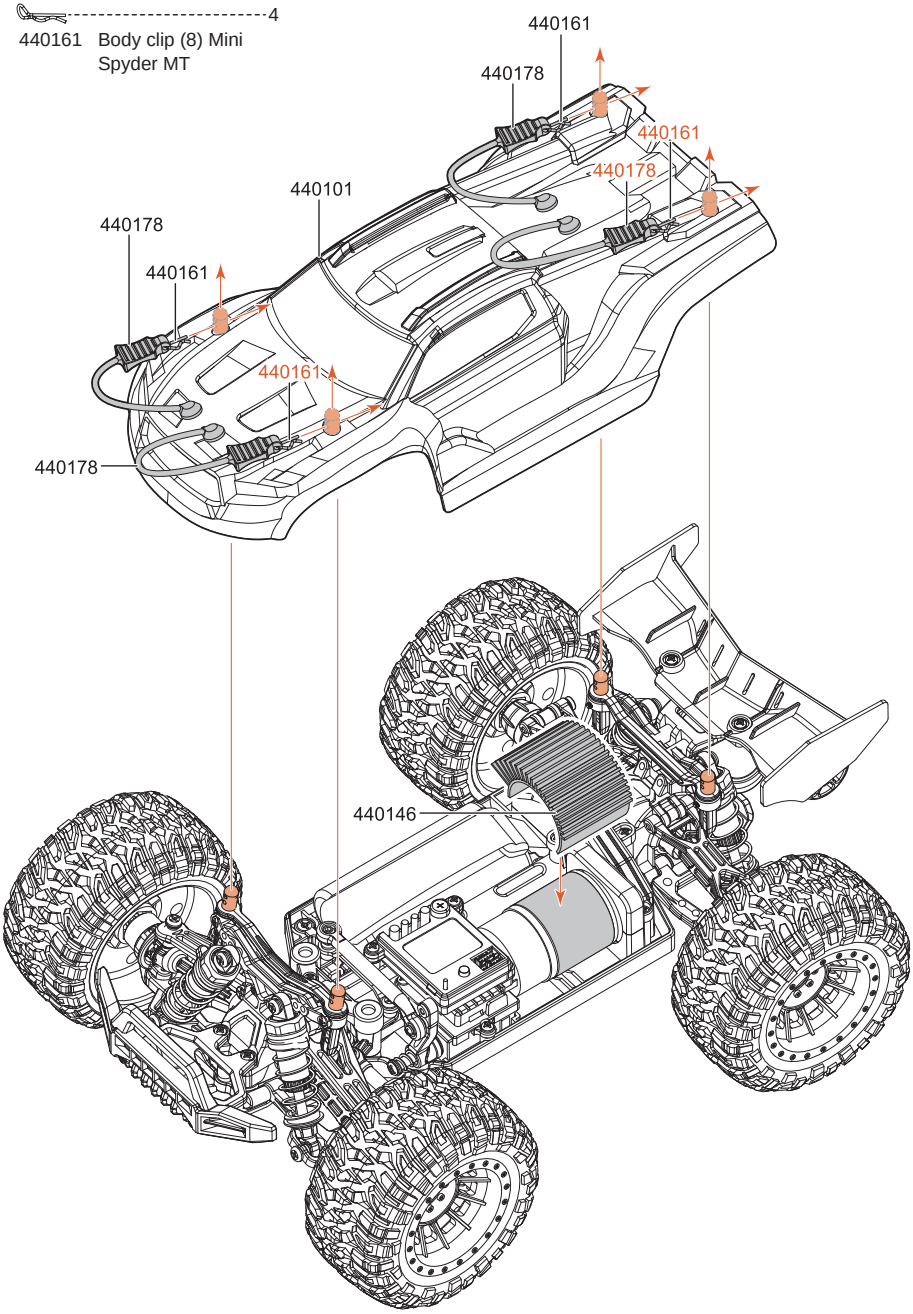

Spare part list

440101

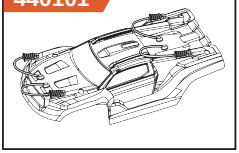

Body Mini Spyder MT 1/18

440102

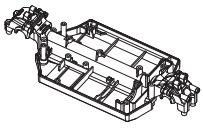

Chassis Mini Spyder MT

440103

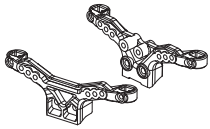

Shock towers fr + rr Mini Spyder MT

440104

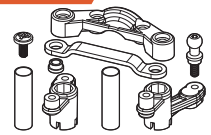

Servo lever Mini Spyder MT

440105

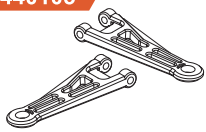

Uper Arm l+r fr Mini Spyder MT

440106

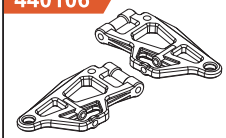

Lower Arm l+r fr Mini Spyder MT

440107

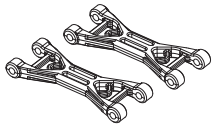

Uper Arm (2) rr Mini Spyder MT

440108

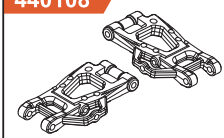

Lower Arm l+r rr Mini Spyder MT

440109

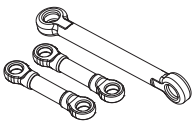

Steering trackrods Mini Spyder MT

440110

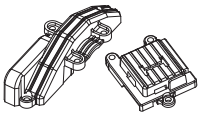

Center spur cover Mini Spyder MT

440111

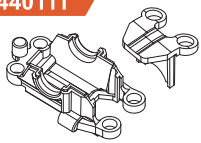

Transmission case fr Mini Spyder MT

440112

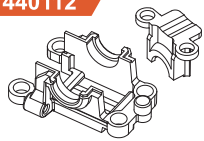

Transmission case rr Mini Spyder MT

440113

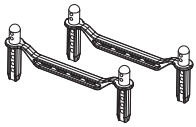

Body posts fr + rr Mini Spyder MT

440114

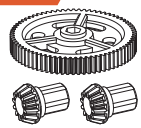

Center driveshaft gears Mini Spyder MT

440116



Servo saver set Mini Spyder MT

440117



Steering block l+r Mini Spyder MT

440118

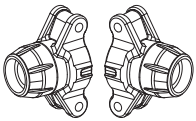

Upright (2) Mini Spyder MT

440119

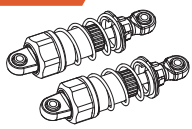

Shock set (2) Mini Spyder MT

440120

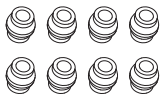

Shock pivotball (8) Mini Spyder MT

440121



Driveshaft set (2) fr Mini Spyder MT

440122

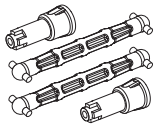

Driveshaft set (2) rr Mini Spyder MT

440123

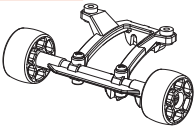

Wheelie bar Mini Spyder MT

440124

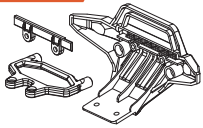

Bumper fr Mini Spyder MT

440125

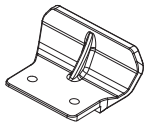

Bumper rr Mini Spyder MT

Spare part list

440126

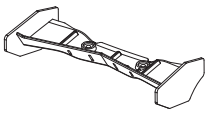

Wing Mini Spyder MT

440127



Center driveshaft Mini Spyder MT

440128

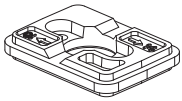

Motor mount Mini Spyder MT

440129

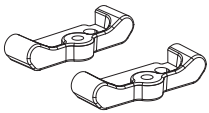

Suspension bracket fr + rr Mini Spyder MT

440130

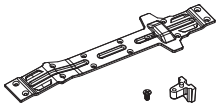

Transmission cover Mini Spyder MT

440131

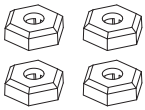

Wheel hexacon (4) Mini Spyder MT

440132

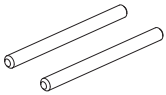

Pivot pin (2) fr/rr Mini Spyder MT

440133



Pivot ball steering (8) Mini Spyder MT

440134



Wheel/tyre set (2) Mini Spyder MT

440135



Battery 7,4 1500mAh Mini Spyder MT

440136

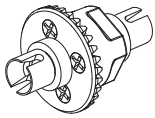

Diff pro fr/rr Mini Spyder MT

440139

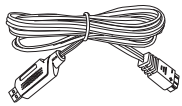

USB charger Mini Spyder MT

440143



Screw flanged M2.6x15 (10) Mini Spyder MT

440144

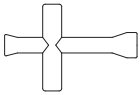

Wheel wrench Mini Spyder MT

440145

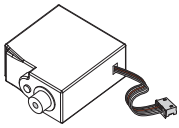

Servo Mini Spyder MT

440146



Motor cooler Mini Spyder MT

440147

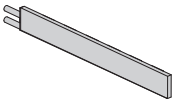

Led bar Mini Spyder MT

440152



Pivot ball 4.8x5.2x2.2mm (4) Mini Spyder MT

440153



Pivot ball (4) Mini Spyder MT

440154

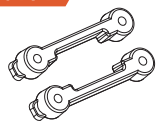

Battery mount (2) Mini Spyder MT

440155

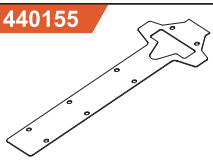

Transmission gasket Mini Spyder MT

440156

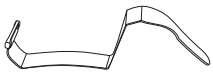

Battery strap Mini Spyder MT

440160



Ball bearing 6.35x9.5x3.2 (4) Mini Spyder MT

440161

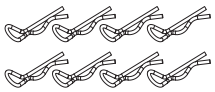

Body clip (8) Mini Spyder MT

Spare part list

440163

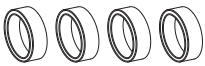

Ball bearing 8x12x3.5 (4) Mini Spyder MT

440164



Screw M2.6x6 (10) Mini Spyder MT

440165



Self tapping screw RH M2.6x8 (10) Mini Spyder MT

440166



Screw RH M2.6x10 (10) Mini Spyder MT

440167



Transmitter Mini Spyder MT

440168

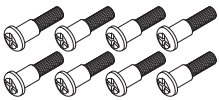

Self tapping screw M3x13 (10) Mini Spyder MT

440169



Self tapping screw RH M2x10 (10) Mini Spyder MT

440170

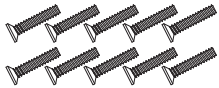

Self tapping screw Cs M2x6 (10) Mini Spyder MT

440171

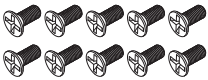

Screw CS M2x6 (10) Mini Spyder MT

440172



Screw PH M2.5x8 (10) Mini Spyder MT

440173



Screw PH M2.5x10 (10) Mini Spyder MT

440174



Self tapping screw PH M2.6x6 (8) Mini Spyder MT

440175



Self tapping screw PH M2.6x14 (8) Mini Spyder MT

440176



Screw PH M2.5x10 (8) Mini Spyder MT

440177

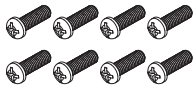

Self tapping screw PH M2.6x6 (8) Mini Spyder MT

440178

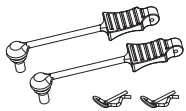

Bodyclip strap (2) Mini Spyder MT

440179

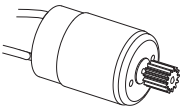

Brushed motor 380 Mini Spyder MT

440180

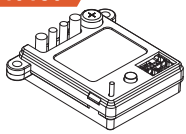

ESC brushed motor Mini Spyder MT

440181

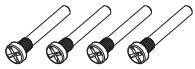

Half treaded screw M3x19,5 (4) Mini Spyder MT

440182

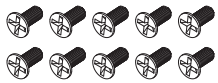

Self tapping screw RH M2.3x6 (10) Mini Spyder MT

14+ ages

SPYDER MT rtr

INTRODUCTION TO UPGRADED PARTS

GUIDE MANUAL

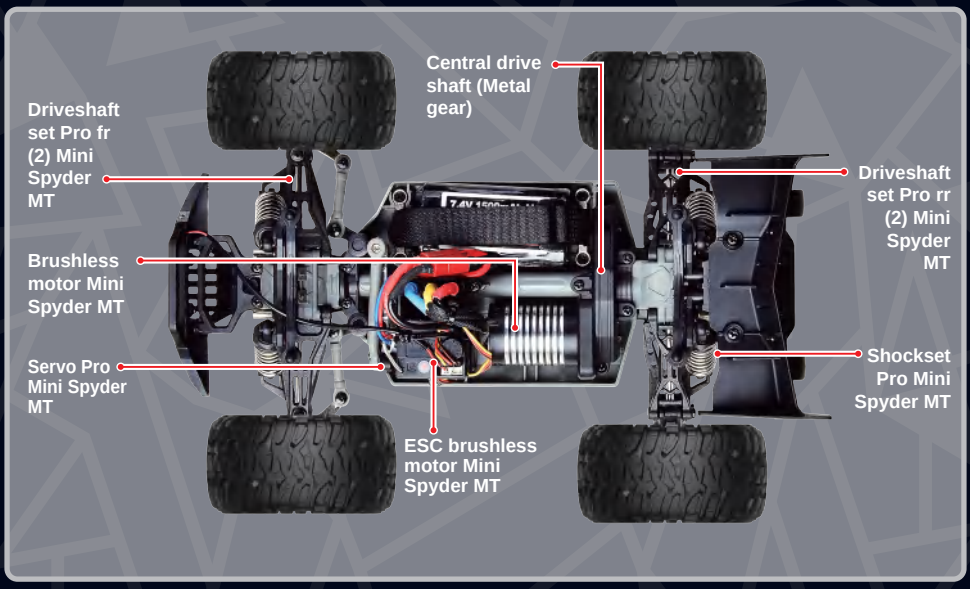

⚠ GUIDELINES FOR UPGRADE COMBINATION:

To obtain full upgrade performance, all matching parts inside the blue box must be replaced together when swapping any single component.



Center driveshaft gears pro Mini Spyder MT



Pinion 19T pro Mini Spyder MT



Brushless motor Mini Spyder MT



ESC brushless motor Mini Spyder MT



Servo Pro Mini Spyder MT



Driveshaft set Pro fr (2) Mini Spyder MT



Driveshaft set Pro rr (2) Mini Spyder MT



Metal Nut M4 (4) Mini Spyder MT



Shockset pro Mini Spyder MT

SERPENT

FOR MORE PLEASE VISIT SERPENT.COM

14+ AGES

HIGH SPEED VEHICLE

RTR READY TO RUN | SHOCK | STEERING SERVO | 4 CH 4 FUNCTION | 14+ AGES

mini SPYDER rtr MT



EP

1/18 scale offroad

Serpent

- Please fully charge the battery pack before each use.
- This product is not a toy, but a full-scale model car. Children under aged 14 must not operate this product unless they are closely supervised by adults.

⚠ Warning

1. Not for children under 14 years due to small parts.
2. Detailed scale kit for adult collectors to assemble.
3. The real object may be slightly different from the graphics, please take the real object as the standard!